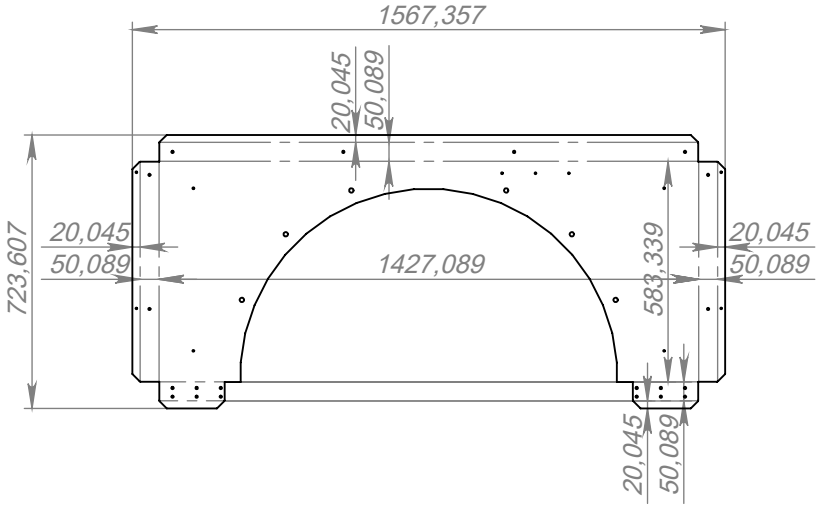
1567,357
20,045
50,089
723,607
20,045
50,089
1427,089
583,339
20,045
50,089
20,045
50,089

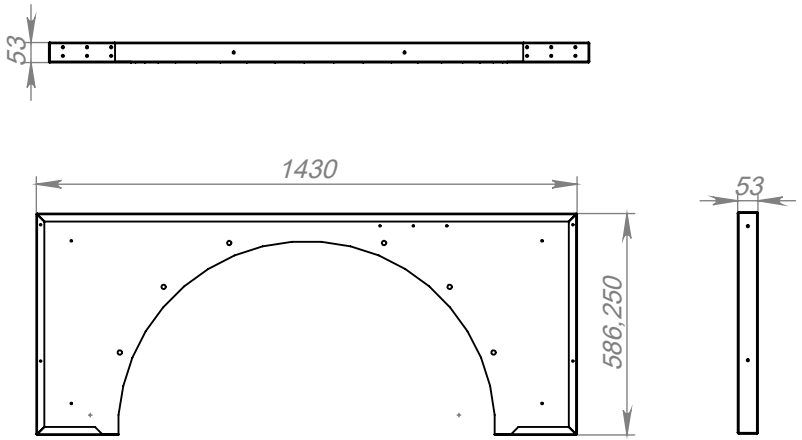
53
1430
586,250
53

